Single Row Tapered Roller Bearing

32200 Series-32206BJ2/QCL7CVA606

WUXI GUANGQIANG BEARING TRADE CO.,LTD

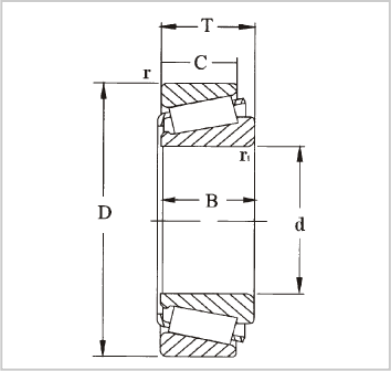

Designação	**32206BJ2/QCL7CVA606**
Dimensões principais (mm)	
d1	30
D	62
B	21.25
Classificações básicas de carga (KN)	
dyc (Cr)	56
stc (Cor)	58.5
Pu	6.55
Avaliações de velocidade (rpm)	
Classificações de velocidade	9000
Limitando a velocidade	11000
Peso (Kg)	0.30
ISO335	
Dimensões (ABMA)	5DC
Dimensões (mm)	
d	30
d1	47.3
B	**20**
C	17
r1,2 (min)	1
r3,4 (min)	1
uma	18
Dimensões de abutment e filete (mm)	
da (max)	36
db (min)	36
Da (min)	50
Da (max)	56
Db (min)	**60**
Ca (min)	**3**
Cb (min)	4
ra (max)	1
rb (max)	1
Valor	
e	0.57
Y	1.05
Yo	0.6

GQZ high quality 32200 Series Single Row Tapered Roller Bearing

Tapered roller bearings have tapered inner and outer raceways and rollers to handle simultaneous radial and thrust loads. Their axial load carrying capacity is directly related to the contact angle of the rollers and raceway shaft.

They are available in single-row, double-row, and four-row designs. The individual parts of tapered roller bearings are commonly sold separately as cups and cones. Cones contain the roller assembly and inner ring while cups include the outer ring. Full assembly units contain both the cup and cone. As separable bearings, different designs and sizes are available to accommodate a variety of applications.

Wuxi Guangqiang Bearing Trade Co.,Ltd-Tel:86-510-82601571-Email:gq@gqbearing.com,shary@gqbearing.com-http://www.bearing-asia.com