Single Row Tapered Roller Bearing

32000 Series-32040X

WUXI GUANGQIANG BEARING TRADE CO.,LTD

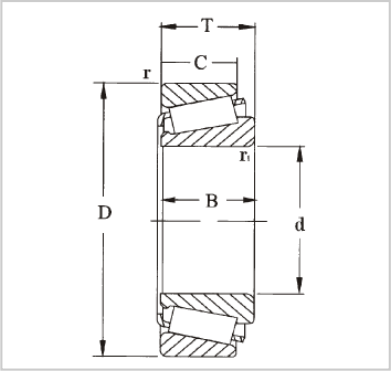

Designação	**32040X**
Dimensões principais (mm)	
d1	200
D	310
B	70
Classificações básicas de carga (KN)	
dyc (Cr)	748
stc (Cor)	1370
Pu	127
Avaliações de velocidade (rpm)	
Classificações de velocidade	1400
Limitando a velocidade	1900
Peso (Kg)	19.5
ISO335	
Dimensões (ABMA)	4FD
Dimensões (mm)	
d	200
d1	254
B	70
C	53
r1,2 (min)	**3**
r3,4 (min)	2.5
uma	66
Dimensões de abutment e filete (mm)	
da (max)	222
db (min)	214
Da (min)	273
Da (max)	296
Db (min)	297
Ca (min)	11
Cb (min)	17
ra (max)	2.5
rb (max)	**2**
Valor	
e	0.43
Y	1.4
Yo	0.8

GQZ high quality 32000 Series Single Row Tapered Roller Bearing

Tapered roller bearings have tapered inner and outer raceways and rollers to handle simultaneous radial and thrust loads. Their axial load carrying capacity is directly related to the contact angle of the rollers and raceway shaft.

They are available in single-row, double-row, and four-row designs. The individual parts of tapered roller bearings are commonly sold separately as cups and cones. Cones contain the roller assembly and inner ring while cups include the outer ring. Full assembly units contain both the cup and cone. As separable bearings, different designs and sizes are available to accommodate a variety of applications.

Wuxi Guangqiang Bearing Trade Co.,Ltd-Tel:86-510-82601571-Email:gq@gqbearing.com,shary@gqbearing.com-http://www.bearing-asia.com